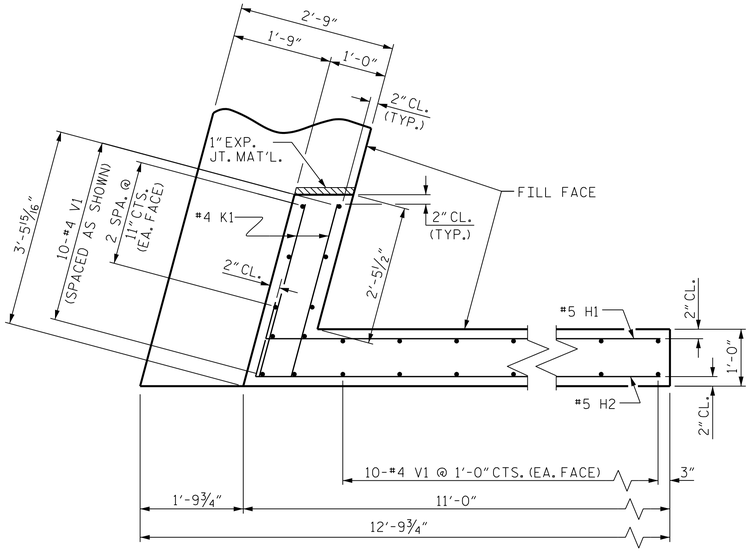

PLAN OF WING (W1)

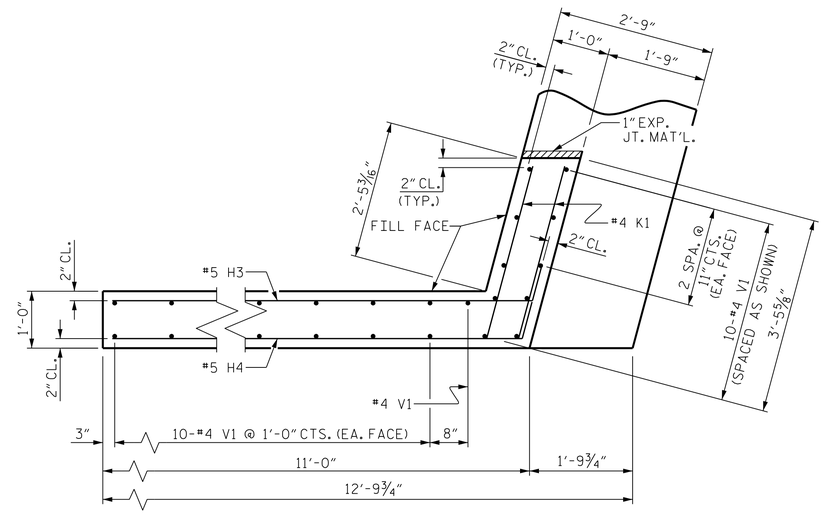

PLAN OF WING (W2)

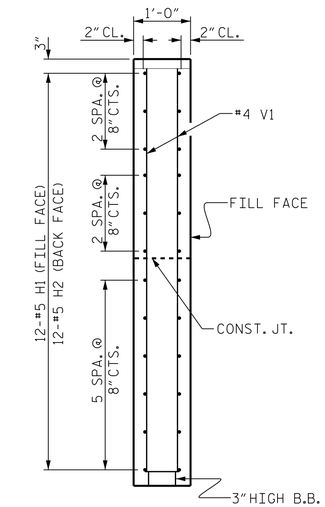

SECTION X-X

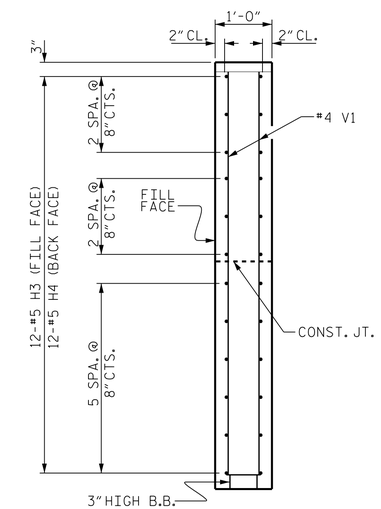

SECTION Y-Y

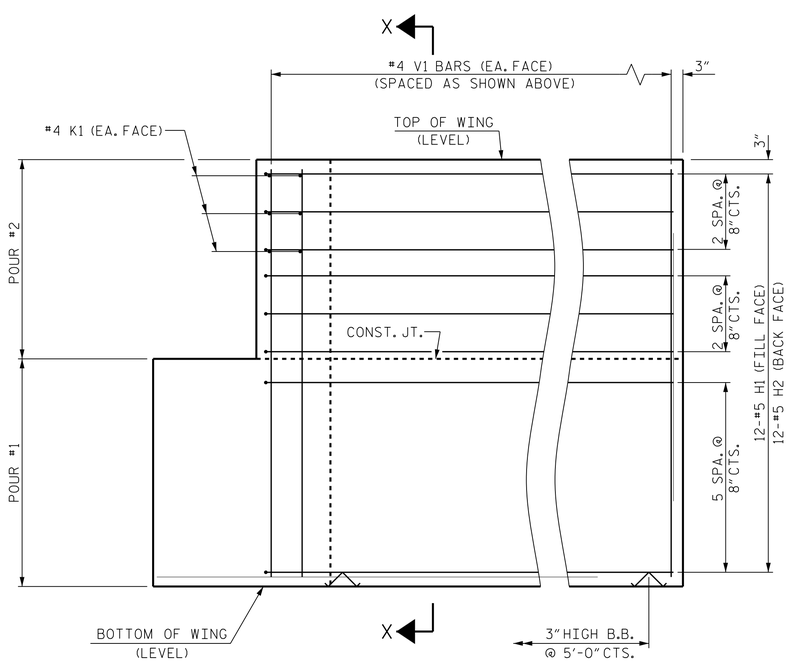

ELEVATION OF WING (W1)

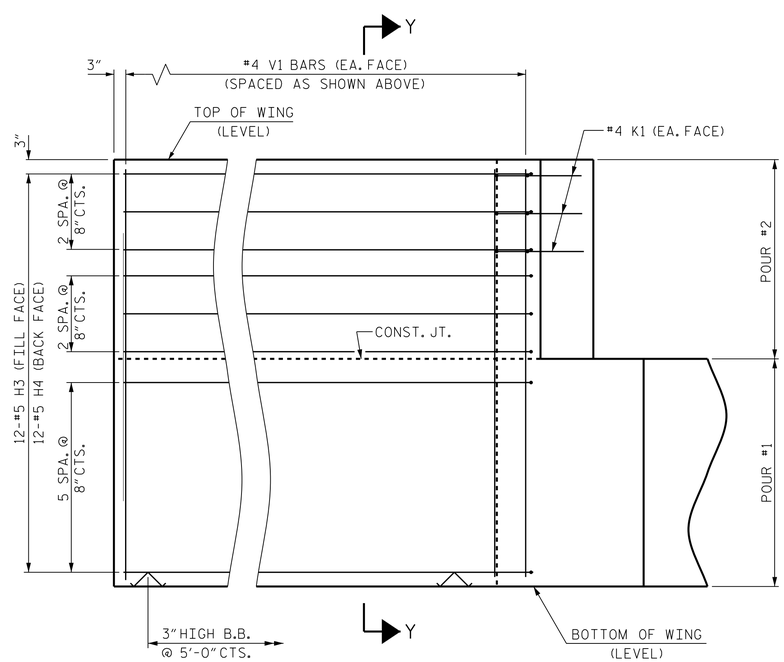

ELEVATION OF WING (W2)

WING DETAILS

PROJECT NO. 17BP.8.R.118

RANDOLPH COUNTY

STATION: 15+40.00 -L-

SHEET 3 OF 4

STATE OF NORTH CAROLINA
DEPARTMENT OF TRANSPORTATION
RALEIGH

SUBSTRUCTURE

END BENT
WING DETAILS

NORTH CAROLINA PROFESSIONAL SEAL 24939 ENGINEER BYRON E. ATKINSON

4/18/2017

DOCUMENT NOT CONSIDERED FINAL UNLESS ALL SIGNATURES COMPLETED

MI ENGINEERING
1011 SCHAUB DRIVE, SUITE 100
RALEIGH, NC 27606
(919) 851-6606
FIRM PE NUMBER : P-0671

REVISIONS						
NO.	BY:	DATE:	NO.	BY:	DATE:	
1			3			
2			4			

SHEET NO. S-12

TOTAL SHEETS 15

STD. NO. EB_30_105S4_33BB

ASSEMBLED BY:	J.I. BREWER	DATE:	01/17
CHECKED BY :	B.E. ATKINSON	DATE:	03/17
DESIGN ENGINEER OF RECORD:	B.E. ATKINSON	DATE:	03/17
DRAWN BY : WJH 12/11	REV. 4/15	MAA/TMG	
CHECKED BY : AAC 12/11			

4/18/2017
1:50:17 PM
User: blanning
Filename: P:\NC Bridges\MI6005_CH Eng_Div. 8 Br. Repl. 16 Bridges\MI6005_04_Randolph 122\17BP8R118\Structures\401_023_17BP8R118_SMU_EB3.dgn