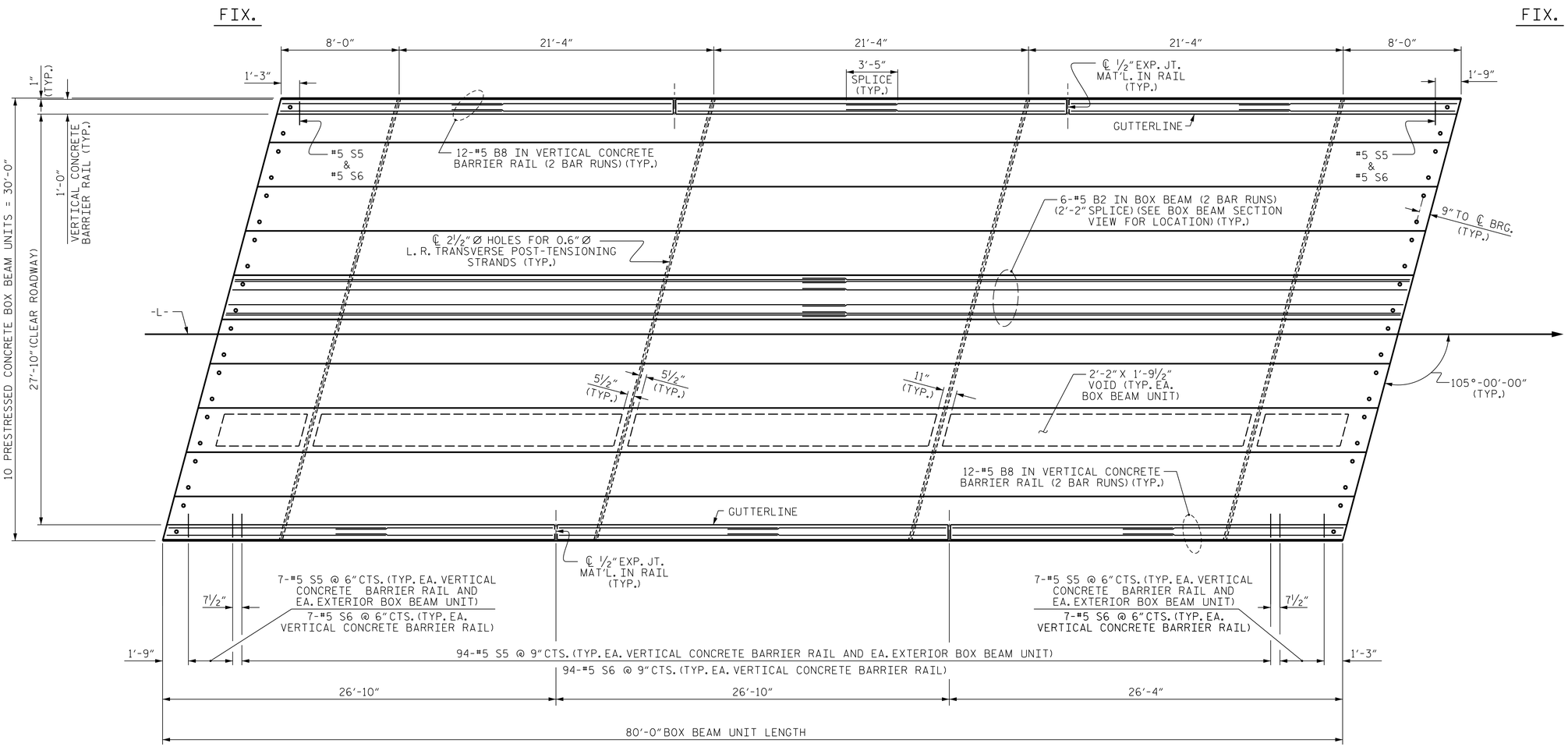

PLAN OF UNIT

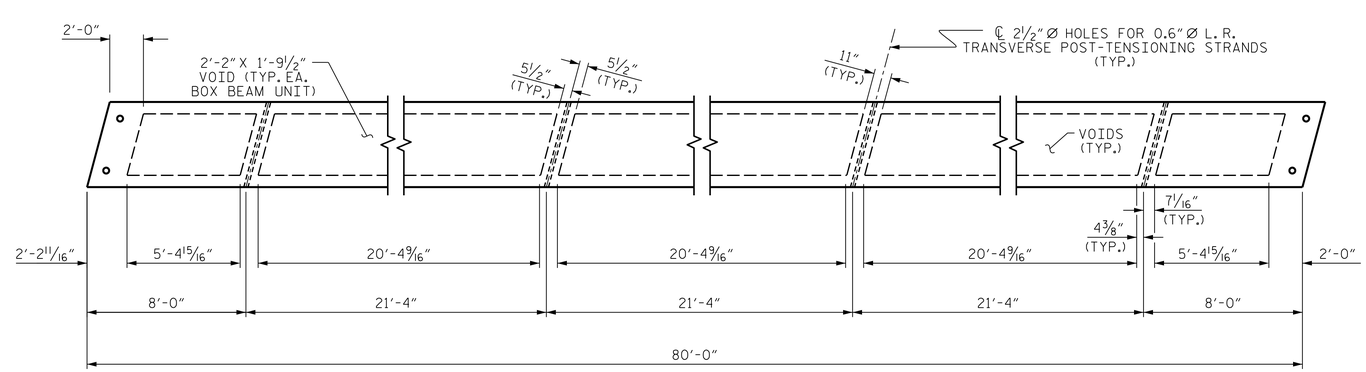

DIAPHRAGM AND VOID LAYOUT

PROJECT NO. 17BP.8.R.118

RANDOLPH COUNTY

STATION: 15+40.00 -L-

SHEET 2 OF 5

STATE OF NORTH CAROLINA
DEPARTMENT OF TRANSPORTATION
RALEIGH

PLAN OF 80' UNIT 27'-10" CLEAR ROADWAY 105° SKEW

NORTH CAROLINA PROFESSIONAL SEAL 24939 ENGINEER BYRON E. ATKINSON

4/18/2017

DOCUMENT NOT CONSIDERED FINAL UNLESS ALL SIGNATURES COMPLETED

MI ENGINEERING
1011 SCHAUB DRIVE, SUITE 100
RALEIGH, NC 27606
(919) 851-6606
FIRM PE NUMBER : P-0671

REVISIONS						
NO.	BY:	DATE:	NO.	BY:	DATE:	
1			3			
2			4			

SHEET NO. S-5
TOTAL SHEETS 15

ASSEMBLED BY: J.I. BREWER	DATE: 01/17	
CHECKED BY : B.E. ATKINSON	DATE: 02/17	
DESIGN ENGINEER OF RECORD: B.E. ATKINSON	DATE: 03/17	
DRAWN BY : DGE 8/11	REV. 8/14	MAA/TMG
CHECKED BY : TMG 11/11		

STD.NO.33PCBB_30_105S_80L

4/18/2017
1:50:03 PM
User: blanning
Filename: P:\NC Bridges\M16005_CH Eng_Div.8 Br. Repl. 16 Bridges\M16005_04_Randolph 122\17BP8R118\Structures\401_009_17BP8R118_SMU_BBU2.dgn