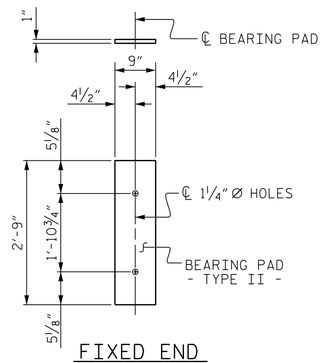

FIXED END

(TYPE II - 20 REQ'D)

ELASTOMERIC BEARING DETAILS

ELASTOMER IN ALL BEARINGS SHALL BE 60 DUROMETER HARDNESS.

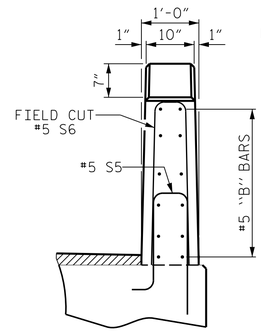

END VIEW

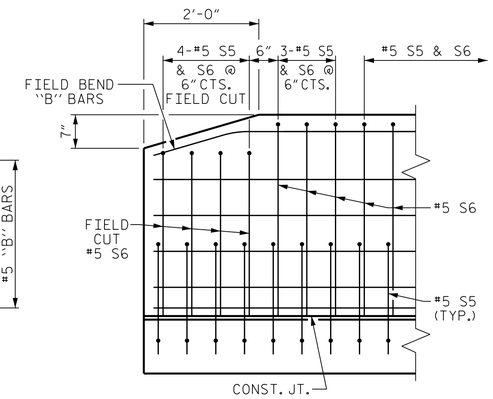

SIDE VIEW

END OF RAIL DETAILS

BOX BEAM UNITS REQUIRED			
	NUMBER	LENGTH	TOTAL LENGTH
EXTERIOR B.B.	2	80'-0"	160'-0"
INTERIOR B.B.	8	80'-0"	640'-0"
TOTAL	10	———	800'-0"

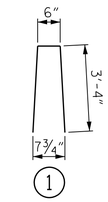

BAR TYPE

BAR DIMENSIONS ARE OUT TO OUT

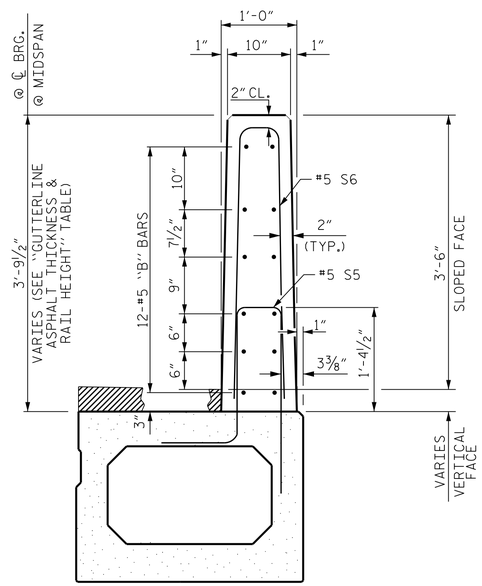

SECTION THRU RAIL

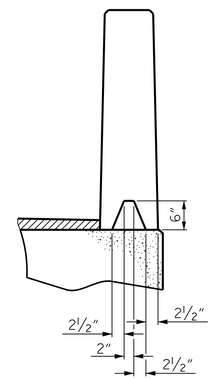

SECTION S-S

AT DAM IN OPEN JOINT
(THIS IS TO BE USED ONLY
WHEN SLIP FORM IS USED)

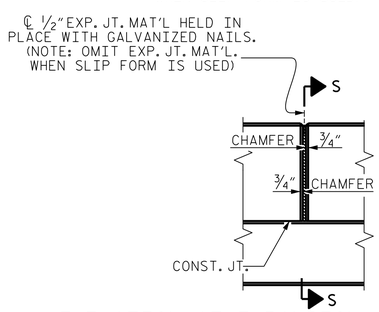

ELEVATION AT EXPANSION JOINTS

VERTICAL CONCRETE BARRIER RAIL DETAILS

BILL OF MATERIAL FOR VERTICAL CONCRETE BARRIER RAIL					
BAR	BARS PER PAIR OF EXTERIOR UNITS	SIZE	TYPE	LENGTH	WEIGHT
	80' UNIT				
* B8	144	#5	STR	14'-11"	2240
* S6	216	#5	1	7'-2"	1615
* EPOXY COATED REINFORCING STEEL			LBS.		3855
CLASS AA CONCRETE			CU.YDS.		20.7
TOTAL VERTICAL CONCRETE BARRIER RAIL			LN.FT.		160.0

GUTTERLINE ASPHALT THICKNESS & RAIL HEIGHT		
	ASPHALT OVERLAY THICKNESS @ MID-SPAN	RAIL HEIGHT @ MID-SPAN
80' UNITS	2¼"	3'-8¼"

PROJECT NO. 17BP.8.R.118

RANDOLPH COUNTY

STATION: 15+40.00 -L-

SHEET 5 OF 5

STATE OF NORTH CAROLINA
DEPARTMENT OF TRANSPORTATION
RALEIGH

3'-0" X 2'-9" PRESTRESSED CONCRETE BOX BEAM UNIT

NORTH CAROLINA PROFESSIONAL SEAL 24939 ENGINEER BYRON E. ATKINSON

4/18/2017

DOCUMENT NOT CONSIDERED FINAL UNLESS ALL SIGNATURES COMPLETED

MI ENGINEERING
1011 SCHAUB DRIVE, SUITE 100
RALEIGH, NC 27606
(919) 851-6606
FIRM PE NUMBER : P-0671

REVISIONS						
NO.	BY:	DATE:	NO.	BY:	DATE:	SHEET NO. S-8
1			3			TOTAL SHEETS 15
2			4			

ASSEMBLED BY:	J.I. BREWER	DATE: 01/17
CHECKED BY :	B.E. ATKINSON	DATE: 02/17
DESIGN ENGINEER OF RECORD:	B.E. ATKINSON	DATE: 03/17
DRAWN BY : DGE 10/11	REV. 4/15	MAA/TMG
CHECKED BY : TMG 11/11		

STD. NO. 33PCBB8_75&105S

4/18/2017
1:50:09 PM
User: blanning
Filename: P:\NC Bridges\MI6005_CH Eng.Div. 8 Br. Repl. 16 Bridges\MI6005.04_Randolph 122\17BP8R118\Structures\401_015_17BP8R118_SMU_BBU5.dgn