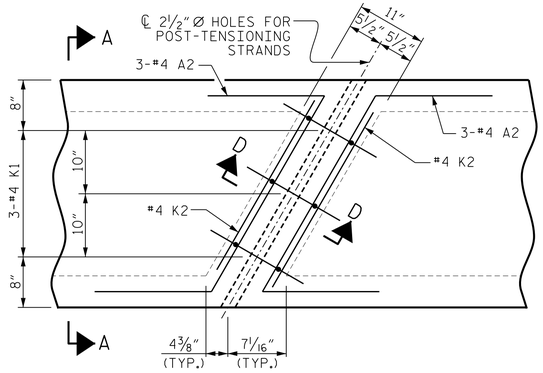


PLAN

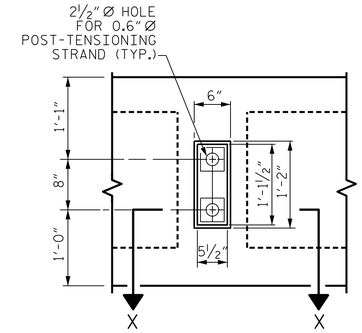


VIEW Y-Y

SHOWING ELEVATION VIEW OF GROUTED RECESS

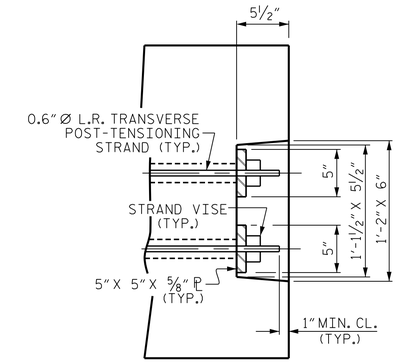


DETAIL "C"

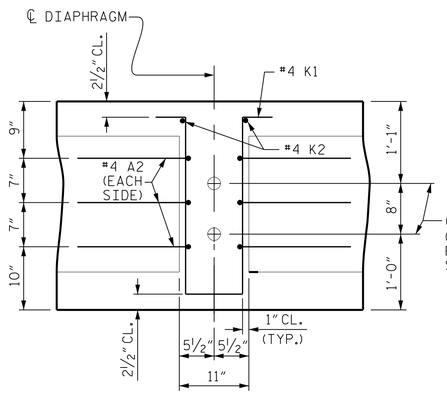


SECTION D-D

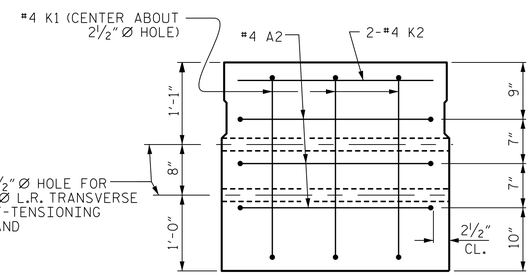


SECTION A-A

VOIDS NOT SHOWN

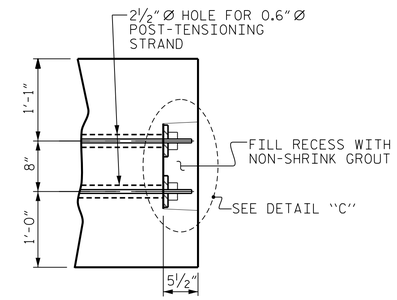


PART SECTION AT RECESS

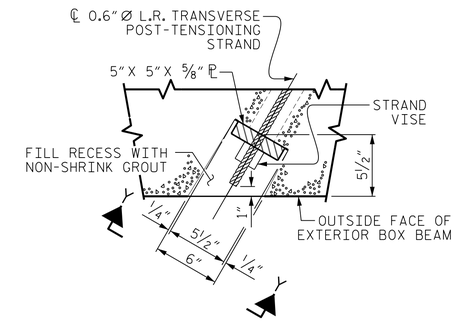


SECTION X-X

SHOWING PLAN VIEW OF GROUTED RECESS

## GROUTED RECESS DETAIL AT END OF POST-TENSIONED STRANDS OF EXTERIOR BOX BEAM

## DOUBLE DIAPHRAGM DETAILS

#4 "S" BARS NOT SHOWN. #4 "S" BARS MAY BE SHIFTED SLIGHTLY TO CLEAR 2½" Ø HOLE.

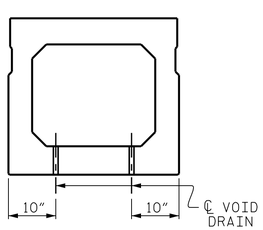


SECTION B-B

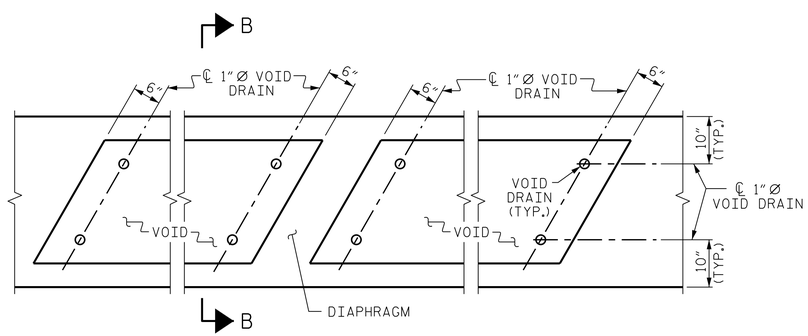


PART PLAN

## VOID DRAIN DETAILS

(DIMENSIONS SHOWN ARE TYPICAL FOR EACH VOID)

| DEAD LOAD DEFLECTION AND CAMBER | |
|---|---|
| | 3'-0" x 2'-9" |
| 80' BOX BEAM UNIT | 0.6" Ø L.R. STRAND |
| CAMBER (SLAB ALONE IN PLACE) | 1¾" ↑ |
| DEFLECTION DUE TO SUPERIMPOSED DEAD LOAD** | ½" ↓ |
| FINAL CAMBER | 1¼" ↑ |

** INCLUDES FUTURE WEARING SURFACE

PROJECT NO. 17BP.8.R.118

RANDOLPH COUNTY

STATION: 15+40.00 -L-

SHEET 4 OF 5

STATE OF NORTH CAROLINA
DEPARTMENT OF TRANSPORTATION
RALEIGH

STANDARD

3'-0" X 2'-9"
PRESTRESSED CONCRETE
BOX BEAM UNIT

NORTH CAROLINA PROFESSIONAL SEAL 24939 ENGINEER BYRON E. ATKINSON

4/18/2017

DOCUMENT NOT CONSIDERED FINAL UNLESS ALL SIGNATURES COMPLETED

MI ENGINEERING
1011 SCHAUB DRIVE, SUITE 100
RALEIGH, NC 27606
(919) 851-6606
FIRM PE NUMBER : P-0671

| REVISIONS | | | | | | SHEET NO. |
|---|---|---|---|---|---|---|
| NO. | BY: | DATE: | NO. | BY: | DATE: | S-7 |
| 1 | | | 3 | | | TOTAL SHEETS |
| 2 | | | 4 | | | 15 |

| | | |
|---|---|---|
| ASSEMBLED BY: | J.I. BREWER | DATE: 01/17 |
| CHECKED BY : | B.E. ATKINSON | DATE: 02/17 |
| DESIGN ENGINEER OF RECORD: | B.E. ATKINSON | DATE: 03/17 |
| DRAWN BY : DGE II/11 | REV. 8/14 | MAA/TMG |
| CHECKED BY : TMG II/11 | | |

4/18/2017
1:50:07 PM
User: blanning
Filename: P:\NC Bridges\MI6005_CH Eng.Div.8 Br. Repl.16 Bridges\MI6005.04_Randolph 122\17BP8R118\Structures\401_013_17BP8R118_SMU_BBU4.dgn

STD.NO.33PCBB5_105S