NOTES :

FOR BERM WIDTH DIMENSIONS, SEE GENERAL DRAWING.

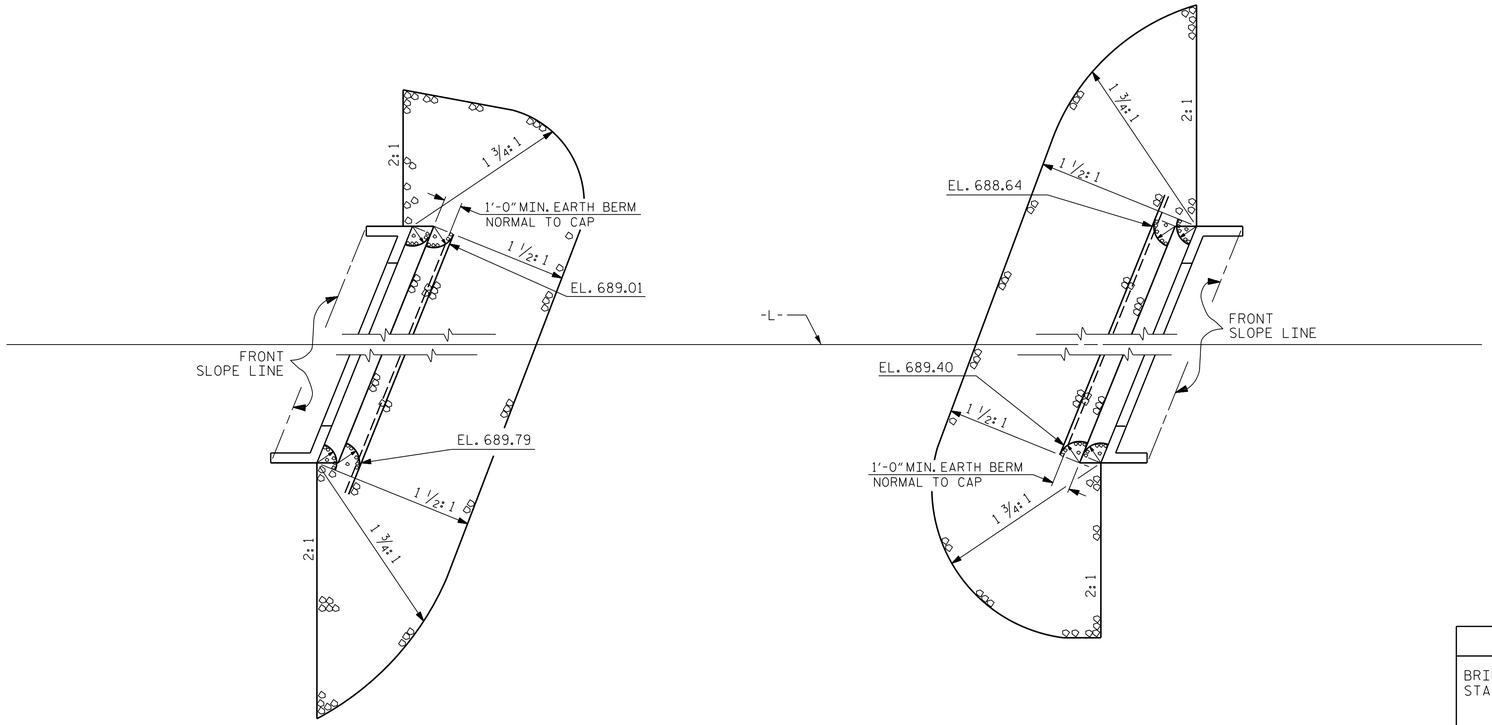

ESTIMATED QUANTITIES		
BRIDGE @ STA. 15+40.00 -L-	RIP RAP CLASS II (2'-0" THICK)	GEOTEXTILE FOR DRAINAGE
	TONS	SQUARE YARDS
END BENT 1	134	148
END BENT 2	151	168

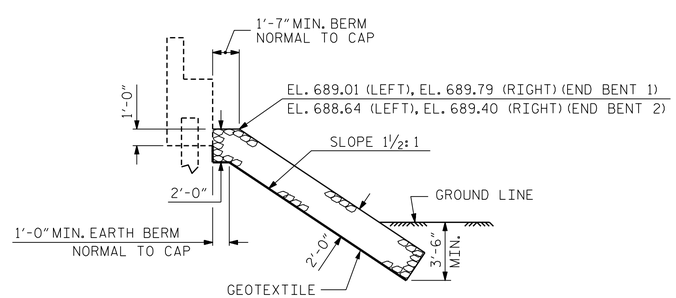

℄ SECTION

BERM RIP RAPPED

PROJECT NO. 17BP.8.R.118

RANDOLPH COUNTY

STATION: 15+40.00 -L-

NORTH CAROLINA PROFESSIONAL SEAL 24939 ENGINEER BYRON E. ATKINSON

4/18/2017

DOCUMENT NOT CONSIDERED FINAL UNLESS ALL SIGNATURES COMPLETED

MI ENGINEERING
1011 SCHAUB DRIVE, SUITE 100
RALEIGH, NC 27606
(919) 851-6606
FIRM PE NUMBER : P-0671

STATE OF NORTH CAROLINA
DEPARTMENT OF TRANSPORTATION
RALEIGH

STANDARD

RIP RAP DETAILS

REVISIONS								SHEET NO.
NO.	BY:	DATE:	NO.	BY:	DATE:			S-14
1			3					TOTAL SHEETS
2			4					15

ASSEMBLED BY:	J.I. BREWER	DATE:	01/17
CHECKED BY :	B.E. ATKINSON	DATE:	02/17
DESIGN ENGINEER OF RECORD:	B.E. ATKINSON	DATE:	03/17

DRAWN BY :	REK 1/84	REV. 5/1/06R	TLA/GM
CHECKED BY :	RDU 1/84	REV. 10/1/11	MAA/GM
		REV. 12/21/11	MAA/GM

STD. NO. RR1 (Sht 3)

4/18/2017
1:50:22 PM
User: blanning
Filename: P:\NC Bridges\MI6005_CH Eng.Div.8 Br.Repl.(6 Bridges)\MI6005.04.Randolph 122\17BP8RI18\Structures\401.027.17BP8RI18.SMU.RR1.dgn